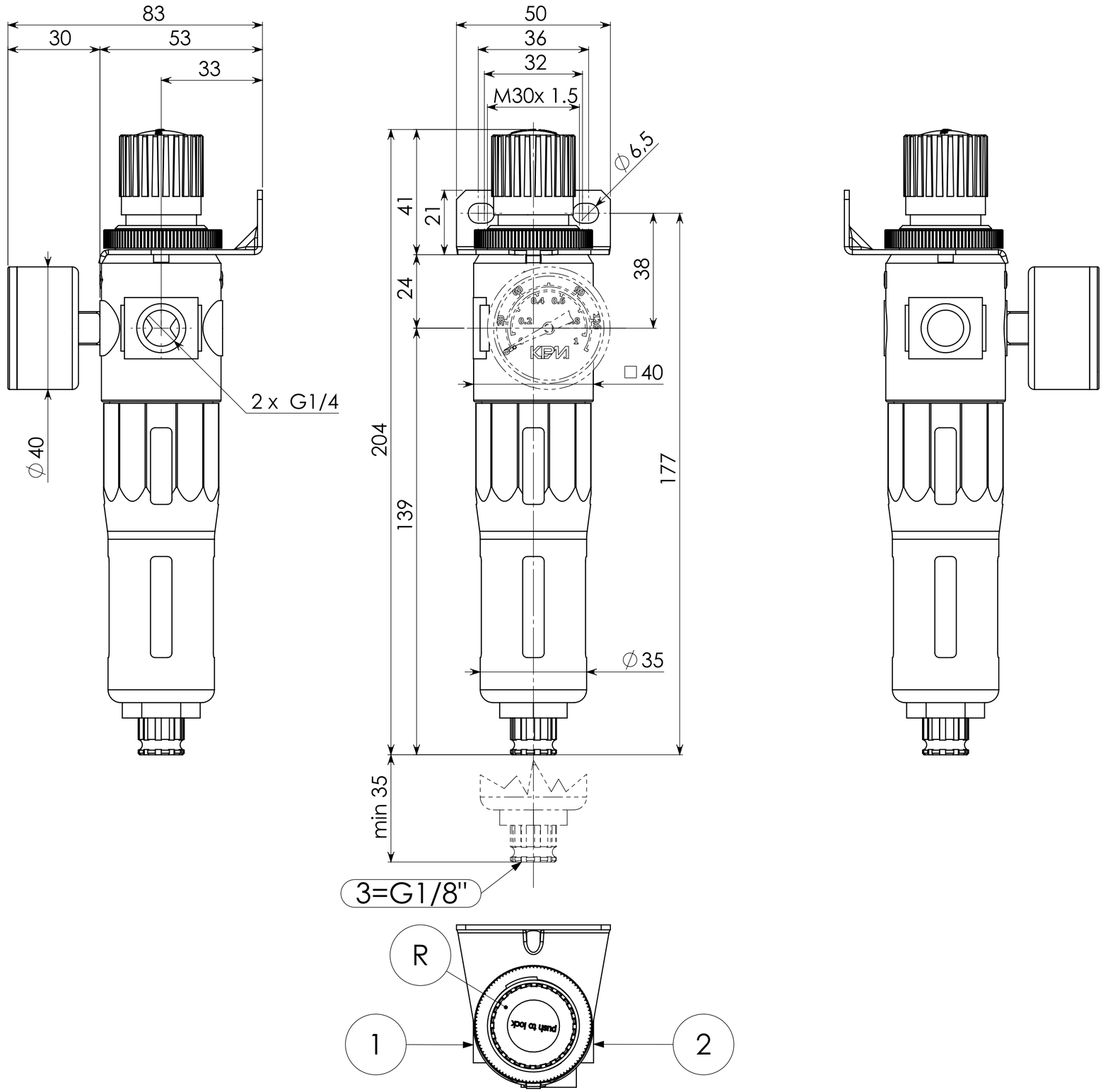
83
30
53
33
2 x G1/4
∅40
50
36
32
M30x 1.5
∅6,5
41
21
38
24
□40
204
177
139
∅35
min 35
3=G1/8"
R
1
2
push to lock