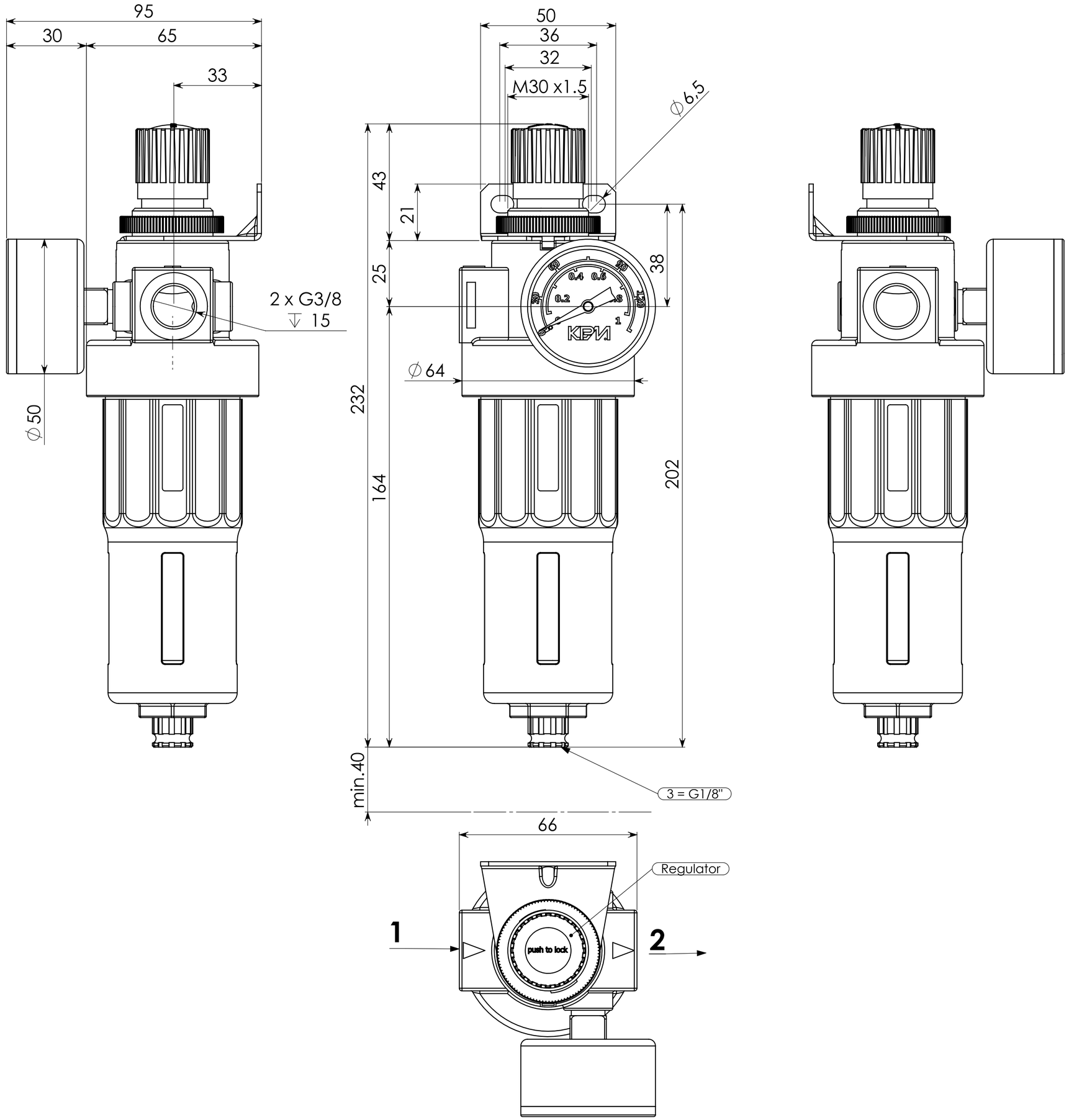
95
30
65
33
2 x G3/8
15
⌀50
50
36
32
M30 x1.5
⌀6,5
43
21
25
38
232
164
202
⌀64
min.40
3 = G1/8"
66
Regulator
1
2
push to lock